Document No.	FO1003	Issue Date:	Draft:
Work Group:	FibreOP Technical Team	July 22, 2013	Final: ✓
Title:	Single Static IP – Port Forwarding Configuration		Version 1.0

Summary:

Use the following Bell Aliant supported method to configure the FibreOP Actiontec RG Port Forwarding Rules for your device requiring a Static IP. Typically these rules would be used to forward incoming traffic through the FibreOP Actiontec RG to your Device which serving one of the following functions:

- Web Server
- FTP Server
- VPN Server
- Email Server

For each of these devices (Applications) the IP Ports that need to be forwarded to the device are distinctly different.

Illustration:

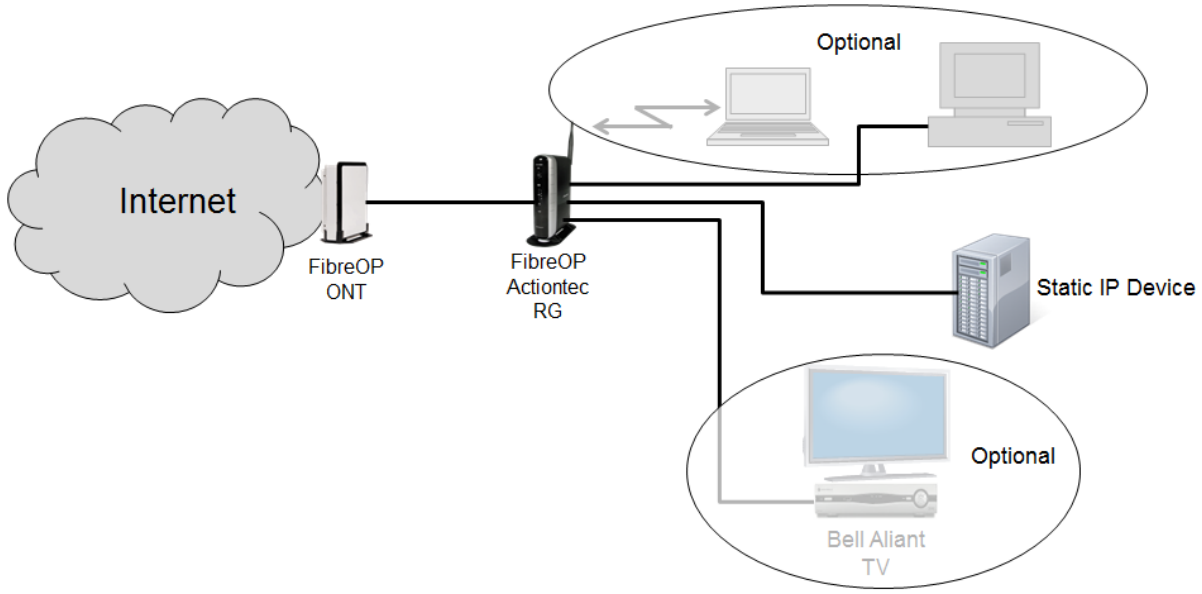

Table of Contents

Figures 2
Prerequisites and Assumptions; 3
Prerequisites: 3
Assumptions: 3
FibreOP Actiontec RG Port Forwarding Rules 4
Configuring Port Forwarding 5
Additional Information 8

Figures

Figure 1 Application Configuration Page 5
Figure 2 Application Forwarding List 6
Figure 3 Port Forwarding Page 7
Figure 4 Applied Port Forwarding Rules 8

Prerequisites and Assumptions;

Prerequisites:

- Bell Aliant owned Actiontec 1000H Routing Gateway configuration according to Configuration Note FO1001.
- Static IP device IP address assignment configured per Config Note FO1002.

Assumptions:

This configuration assumes that device requiring a static IP is connected directly to the Bell Aliant owned FibreOP Actiontec RG by either Ethernet or Wi-Fi. There must not be any other routing or Firewall device installed between the static IP device and the FibreOP Actiontec RG on the customer's Local Area Network (LAN).

FibreOP Actiontec RG Port Forwarding Rules

By default, the FibreOP Actiontec RG protects the LAN devices by blocking all traffic in the downstream direction (from the Internet) that wasn't first solicited from a LAN device. However, customers may desire to allow incoming connections to a Static IP device (or server application) on their FibreOP Actiontec RG LAN. This incoming access can be accomplished, using the FibreOP Actiontec RG by configuring port forwarding.

Port forwarding rules in the RG identify:

- the LAN device IP (example: 192.168.2.10)
- the protocol type (example: TCP)
- the port range
  - example for only port 80: 80-80
  - example for ports 80-2000: 80-2000

Configuring Port Forwarding

Use the following steps to configure port forwarding on your FibreOP Actiontec RG.

1. Connect the Target PC (the PC hosting the application) to the FibreOP Actiontec RG LAN.
2. Connect the Management PC to the FibreOP Actiontec RG LAN.

Note: the Management PC may be the same as the Target PC.

3. Log into the FibreOP Actiontec RG Management User Interface using the Management PC.
4. Use one of the following two methods to configure port forwarding.
    1. Application forwarding – use this method if you are unsure of the ports requiring forwarding.
       Go to step 5

    OR

    2. Manual Port Forwarding settings – use this method if you know the ports that require forwarding.
       Go to Step 6.
5. Automated Configuration:
    1. Click **Firewall > Applications**
       The Application Configuration pages shown in figure 1, appears.

Figure 1 Application Configuration Page

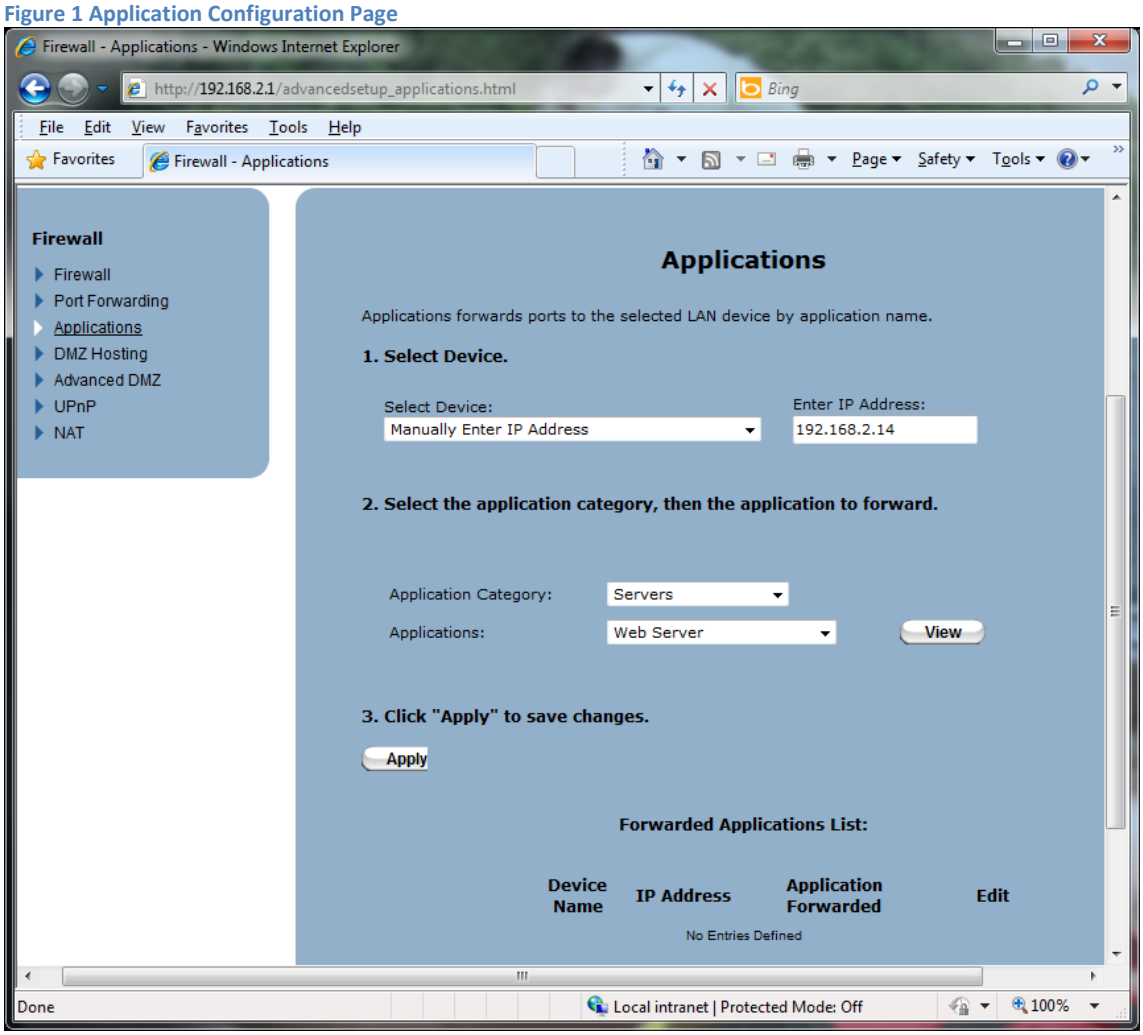

    2. Enter the LAN device IP address.

3. Select the Application Category to narrow down the search for the correct Application.
4. Select the application from the Applications drop down menu.
5. Click **View** - if you would like to show the rules that will be created by the selected application.
6. Click **Apply**.
   The application is added to the Forwarded Application list, as shown in Figure 2.

Figure 2 Application Forwarding List

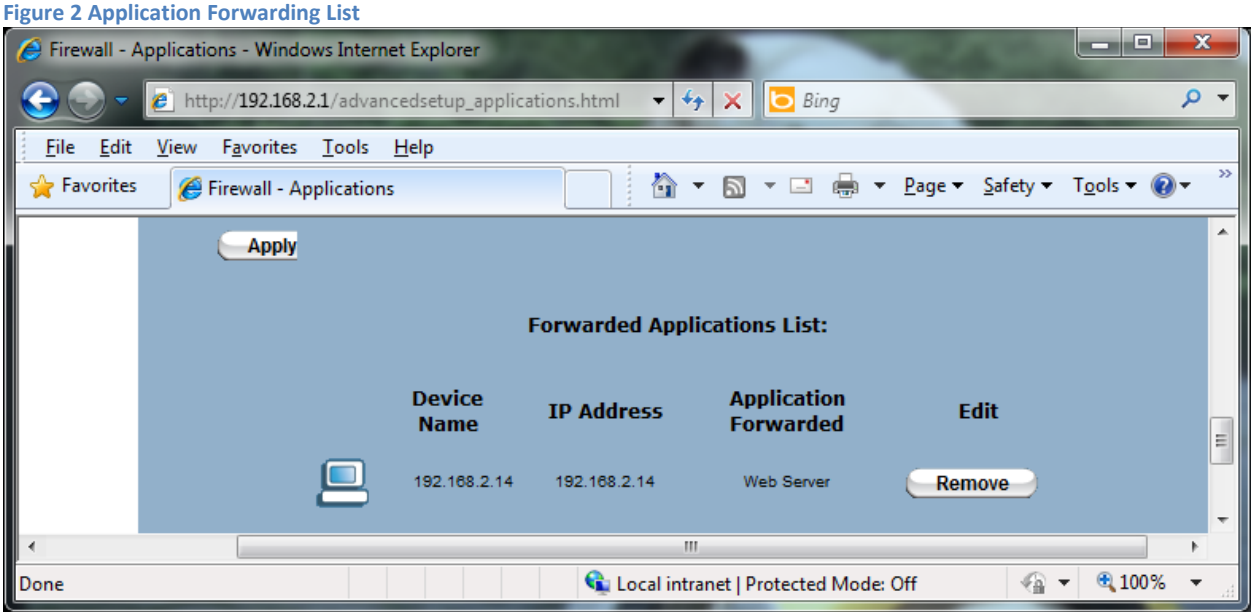

6. Manual Port Forwarding Configuration:
   1. Click **Firewall > Port Forwarding.**
      The Port Forwarding page appears as shown in figure 3.

Figure 3 Port Forwarding Page

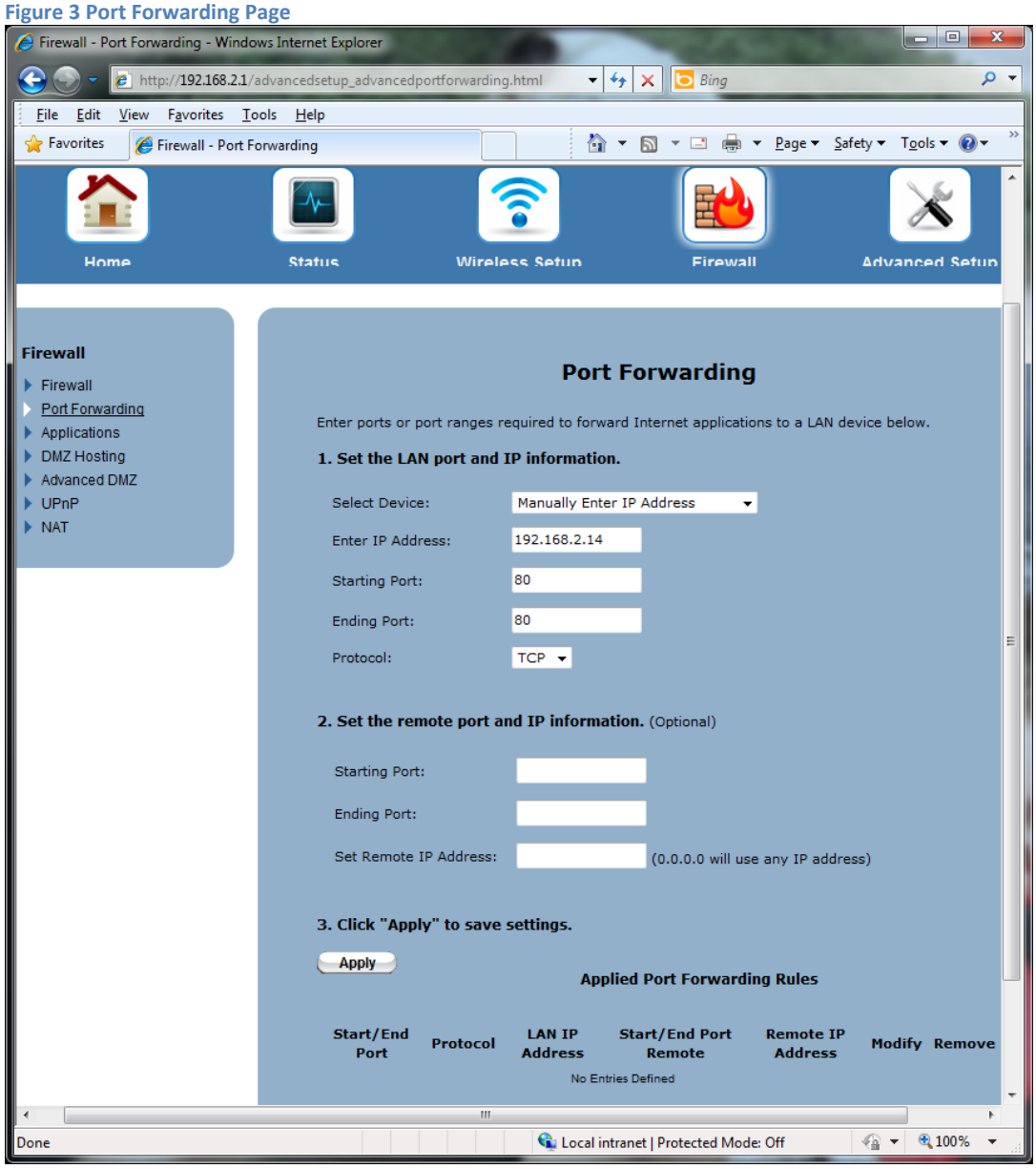

   2. Enter the LAN device IP address.
   3. Enter the starting port range.
   4. Enter the ending port range.
      NOTE: the ending port is the same as the starting port for a rule involving only a single port
   5. Select the protocol.
      NOTE: If the customer requires higher security and desires to restrict the Internet device trying to connect to the LAN device, configure the Starting Port, Ending Port and Remote IP address. Otherwise, leave those settings blank since they will make troubleshooting port forwarding rules very complicated.

6. Click **Apply.**
   The screen will refresh and the rule(s) will be shown at the bottom of the page.

Figure 4 Applied Port Forwarding Rules

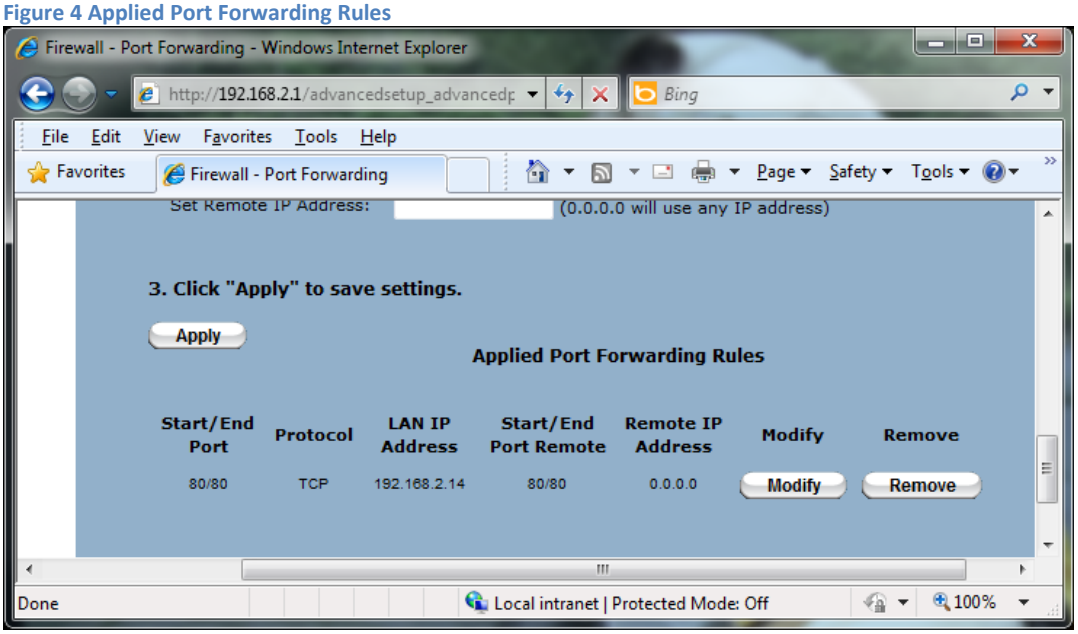

Additional Information

1) Some applications require multiple ports, port ranges and combinations of different protocols. In this case, creating multiple rules may be required.
2) There are many different applications used on customer networks. It is not possible for Bell Aliant to predict what port/protocol combinations are required to make an application work properly. The FibreOP Actiontec RG has preconfigured Applications, located in **Firewall>Applications** for commonly used applications to make this task easier for the customer. If however, the preconfigured Applications do not enable the correct ports/protocols, the customer is expected to know the exact ports/protocols required for their application. This may require the customer to contact the Application provider or perform packet captures to determine where the application is failing due to port forwarding rules.
3) If the customer has their own router behind the FibreOP Actiontec RG, port forwarding rules may need to be configured in the customer router (pointing to that routers LAN devices) in addition to the port forwarding rules required in the FibreOP Actiontec RG (pointing to the customer routers WAN IP). Bell Aliant does not have knowledge of, or support for customer owned routers.
4) A behavior of the Actiontec RG 33.120L.05 firmware surfaces if both port 80 and port 8080 are to be configured as rules at the same time. If this is the case, port 8080 must be configured first so that it is highest in the list of rules at the bottom of the configuration page.